Slewing Drive Performance Parameters		
Tilting Moment	13500 N.m	9957 lbf.ft
Keeping Torque	10400 N.m	7671 lbf.ft
Axial static load	133 kN	29900 lbf.ft
Radial static load	53 N.m	11915 lbf.ft
Deceleration ratio	71:1	

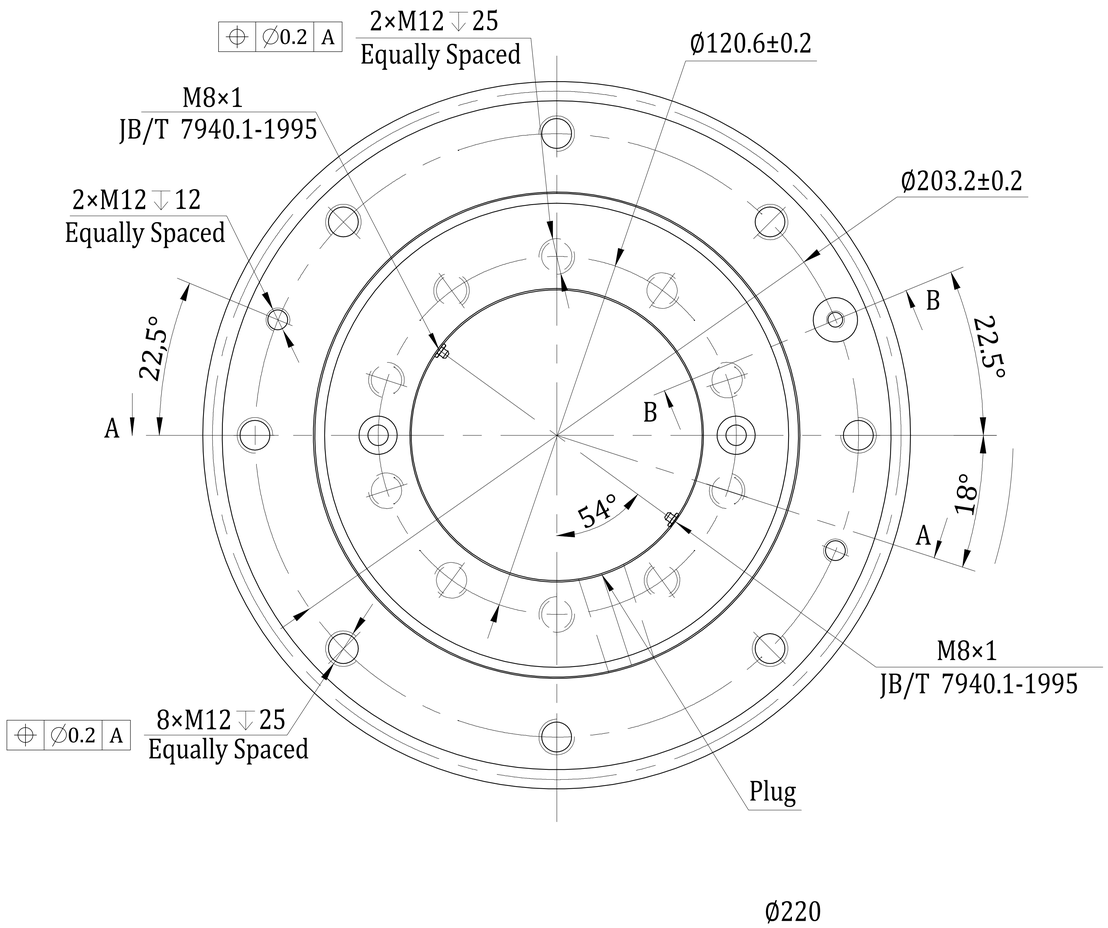

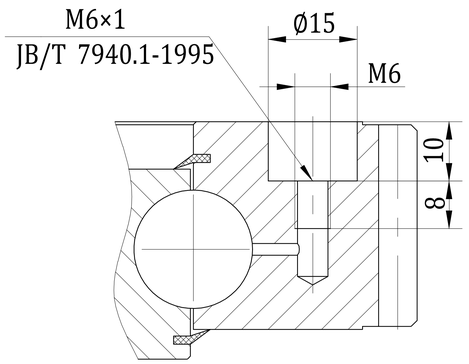

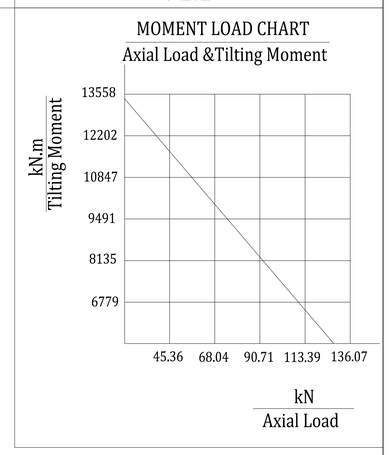

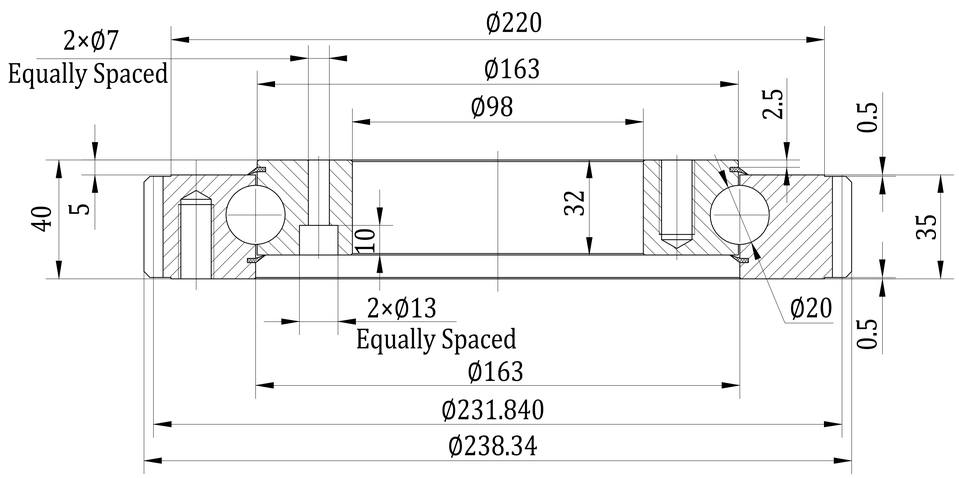

A-A

WEIGHT	SCALE	Slewing Bearing	
8.4 kg	1 : 3		
SIZE	A3	SH7-4-A1	REV
SHEET	1 / 1		B